- - - smart battery design enhance safety in motorsport - - -

LITE BLOX
high performance lightweight batteries

1.) overview – battery technology

2.) risk analysis – batteries in motorsport

3.) standard - motorsport regularities

4.) additional - battery disconnection

LITE BLOX
high performance lightweight batteries

1.) overview – battery technology

Lead-Acid
(SLI, GEL, AGM)
based battery

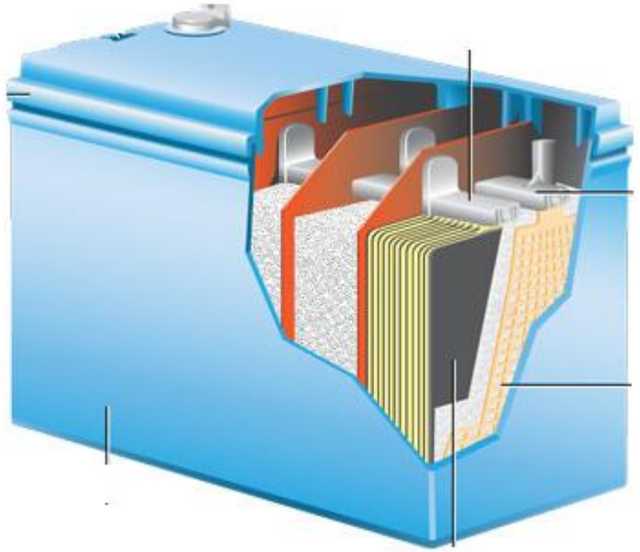

Lithium
(LiPo, $LiFePO_4$)
based battery

LITE BLOX
high performance lightweight batteries

1.) overview – battery technology

Lead-Acid (SLI, GEL, AGM) based battery		Lithium (LiPo, $LiFePO_4$) based battery
10-25	mass [kg]	1-10
1000-2000	power density [W/kg]	2500-3000
2-3	energy density [Ah/kg]	7-8
500-1000	cycle life [cycles]	2500-3000
0,1-0,5	charging rate [C]	1-4
50-60%	depth of discharge [DoD]	80-90%
80-250	price [Eur]	250-1500

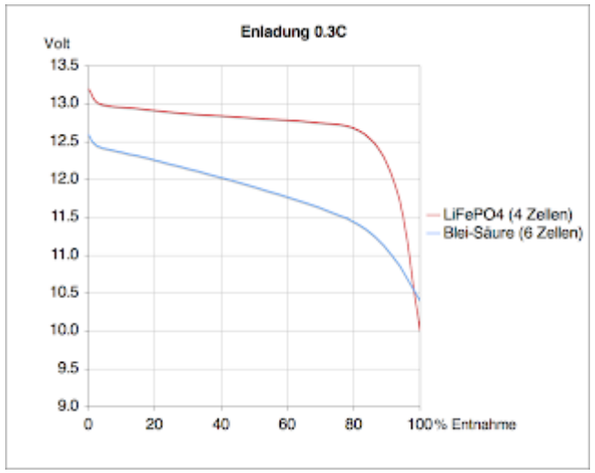

→ **LiFePO4 is applicable for use in powersport applications**

unlike LiPo, LiFePO4 cells will not catch fire or explode on abuse due to chemical stability of cathode material

2.) risk analysis – batteries in motorsport

extended exposure on all car parts including the battery →

causes	threads	actions
bad cell quality	internal short circuit / cell failure → thermal reaction	**A.) purchase / manufacturing QM**
insufficient cell connection	external short circuit → heat & potential fire	
shock / vibration	extended wear / pot. internal cell failure → thermal reaction	**B.) installation & housing concept**
engine / exhaust heat	extended wear / pot. internal cell failure → thermal reaction	
current consumption / output	high energy → heat & potential fire	**C.) battery management**
crash / overvoltage / -current	cell overload → thermal reaction	

passive

active

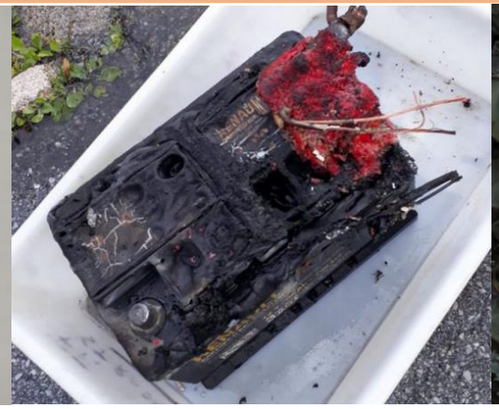

LITE BLOX
high performance lightweight batteries

2.) A: passive safety – quality management

chose only premium battery brands, using →

a. latest premium high current cells (LiFePO4)

b. by established producers (A123, K2, Panasonic…)

c. from a certified supplier (key distributor)

d. with certification (UL1642 / IEC 62619 / UN 38.3)

e. in the highest grade available (no B-stock / pre-used cells)

f. properly conducted (parameters → appearance)

↓

minimum risk for INTERNAL failure

(IATF 16494 - road vehicles functional safety)

LITE BLOX
high performance lightweight batteries

2.) B: passive safety - exposure

extended stress in motorsport use requires passive cell protection →

mechanical abuse
(exposure / handling)

- Internal cell short circuit
- External cell short circuit
- Conception short circuit

thermal abuse
(direct heat / underspec)

- extend cell wear
- Cell chemistry
- Uncontrolled cell reaction
- Cranking outside temp. range

minimum risk for INTERNAL failure

(DIN EN 63057 – lithium starter battery design)

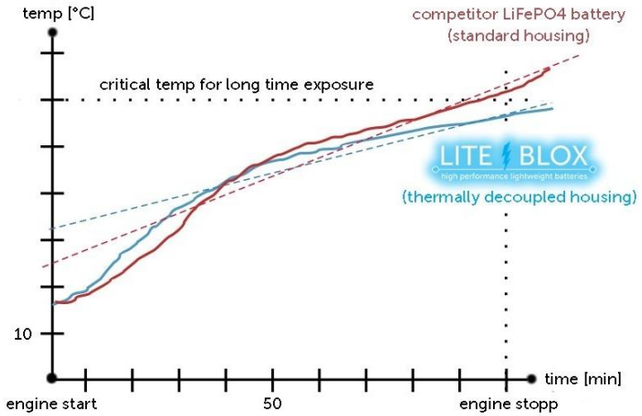

LITE BLOX
high performance lightweight batteries

2.) C: active safety - Battery Management System (BMS)

active surveillance by an advanced BMS-electronics providing,
that battery cells are used within their intended working space →

a. cell balancing (active or passive)

b. discharge / overcharge (single cell surveillance)

c. under / over temperature (temp sensors)

d. high-current / short circuit (amp measure)

e. state of charge (S.O.C.)

f. state of health (S.O.H.)

g. communication interface (BLE, CAN / LIN-bus)

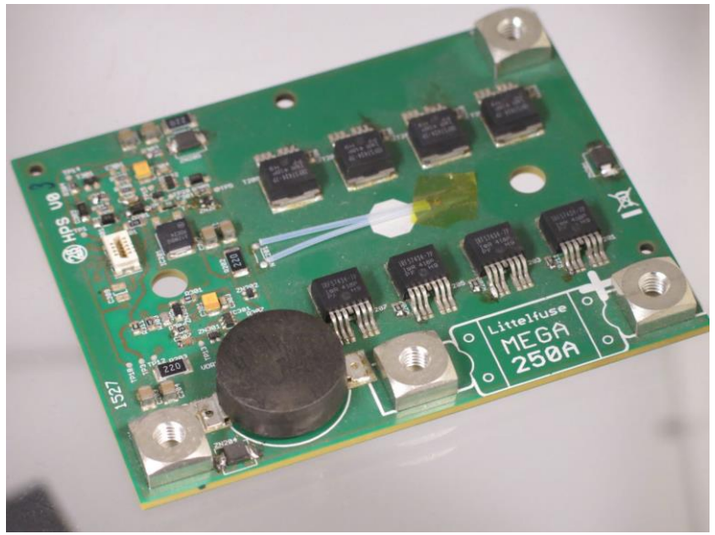

minimum risk for EXTERNAL failure

(ISO 26262 - road vehicles functional safety)

LITE BLOX
high performance lightweight batteries

3.) standard - motorsport regularities

- According to DMSB / MSA, Lithium starter batteries used in motorsport have to be registered, meeting the requirements of UN 38.3 (UN ECE R100 also accepted by DMSB) →

UN 38.3

- Shock
- Impact
- Thermal Shock
- Vibration

← Requirements for transport

Requirements for vehicles with electric propulsion →

UN ECE R100

- Similar requirements to UN38.3 +
- Overtemperature
- Fire

- FIA guidelines: "**Spark free cut-off of all electric circuits & disconnect engine**" →

14.5	**General Circuit Breaker** The driver, when seated normally at the steering wheel with the safety belts fastened, must be able to cut off all the electrical circuits and switch off the engine by means of a spark-proof breaker switch. The switch must be positioned on the dashboard or in any other place easily accessible and must be able to be handled from inside the car by the driver seated and secured by his safety belts - An exterior General Circuit Breaker must be installed in compliance with Article 253.13 of the Appendix J Recommended location: at the lower part of the driver's side windscreen pillar.

LITE BLOX
high performance lightweight batteries

4.) additional - battery disconnection

required safety features of a “circuit breaker”

→ **conventional**

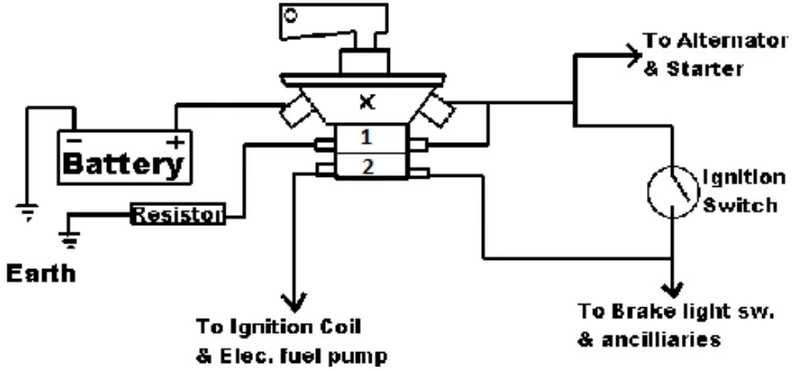

1. battery isolator
(disconnects
the battery)

- close to the battery
- withstand high currents
- high reliability

2. kill-switch
(shuts down
the engine)

- Send “ECU kill” signal
- disconnects ECU power
- disconnects ignition
- disconnects fuel pump

LITE BLOX
high performance lightweight batteries

4.) additional - battery disconnection

required safety features of a “circuit breaker”

→ **electronic**

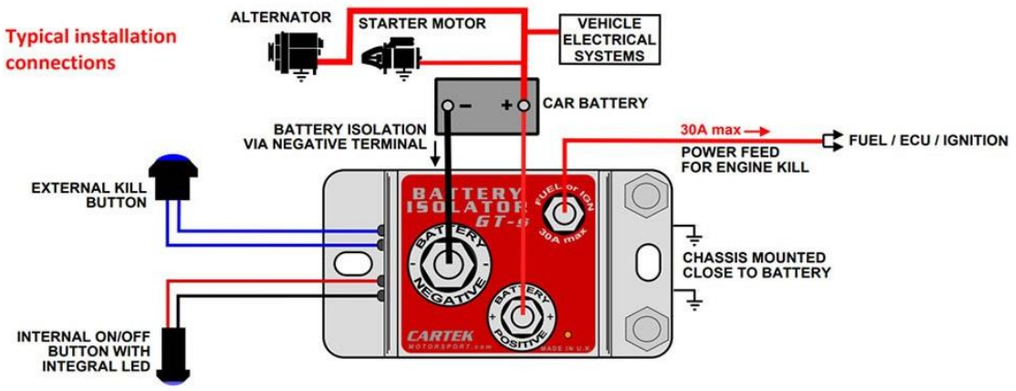

1. battery isolator
(disconnects the battery)

- close to the battery
- withstand high currents
- high reliability

2. kill-switch
(shuts down the engine)

- Send “ECU kill” signal
- disconnects ECU power
- disconnects ignition
- disconnects fuel pump

LITE BLOX
high performance lightweight batteries

4.) additional - battery disconnection

required safety features of a “circuit breaker”

→ **embedded** (deactivated)

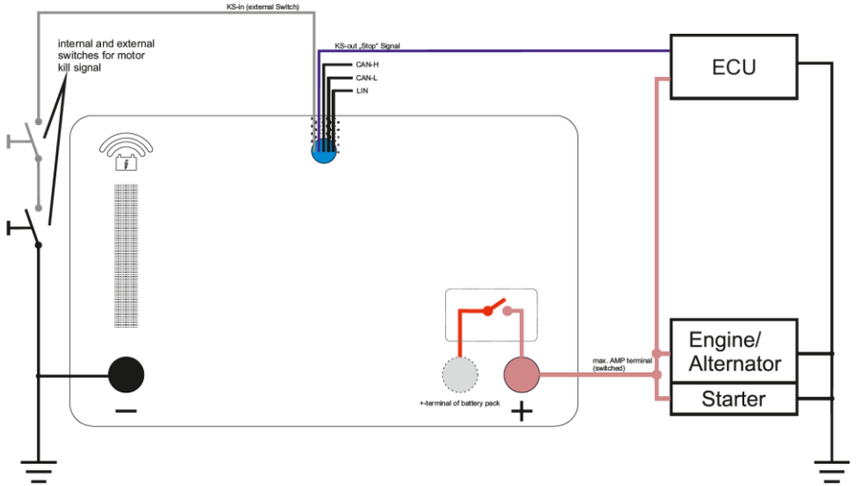

1. battery isolator
(disconnects the battery)

- close to the battery
- withstand high currents
- high reliability

2. kill-switch
(shuts down the engine)

- Send “ECU kill” signal
- disconnects ECU power
- disconnects ignition
- disconnects fuel pump

LITE BLOX
high performance lightweight batteries

4.) external battery disconnection

required safety features of a “circuit breaker”

→ **embedded** (activated)

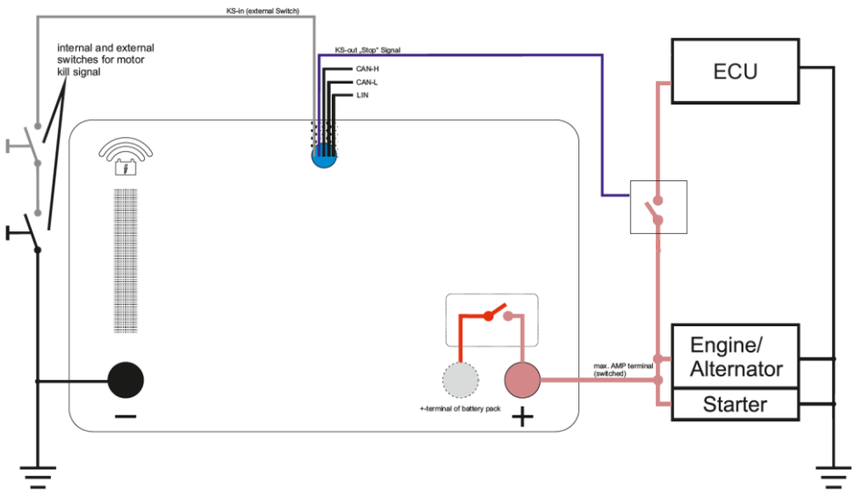

1. battery isolator
(disconnects the battery)

- close to the battery
- withstand high currents
- high reliability

2. kill-switch
(shuts down the engine)

- Send “ECU kill” signal
- disconnects ECU power
- disconnects ignition
- disconnects fuel pump

LITE BLOX
high performance lightweight batteries

4.) external battery disconnection

required safety features of a “circuit breaker” →

combined solution is crucial for safety

unless…

both functions (kill-switch / battery isolator) work properly & tested in advance!

LITE BLOX
high performance lightweight batteries

LITEWERKS GmbH – profound expertise in lightweight battery engineering

A young & highly motivated engineering company from Lake Of Constance Germany,
working on sophisticated solutions for ambitious customers in professional motorsport, OEM automotive & industry.

We are specialized in comprehensive development for tailor made lightweight battery solutions since 2014,
always busy spreading the word for our in house brand **LITE BLOX batteries** (www.liteblox.de):

LITE BLOX
high performance lightweight batteries